UNIVERISTY OF NEBRASKA - LINCOLN

Acrylic Construction Manual

Ground Water Well Model

Dr. Bruce Dvorak
Sharon Skipton
Allison Potter

4/17/2012

Contents

Introduction

The structure of the model is composed mainly of clear acrylic, wire mesh and acrylic glue. Parts were ordered from acrylic supply companies which are listed on page 18.

Instructions outlined in this manual are intentionally not step-by-step instructions. Basic guidelines are given and general components are described. In constructing a model, this manual will provide sufficient information to understand the model's basic build and to guide the construction of a similar model. This is done with an understanding that acrylic construction is not an exact science and largely depends on experience, personal preference, and available tools.

Acrylic Instructions

Outer Walls

The basic outer structure of the model is made from several 3/8” clear acrylic sheets; the dimensions and quantities of which are listed in the chart below. Figure 1 shows each piece with corresponding dimensions.

Pane	Quantity	Dimension
Front & Back	2	12” x 24”
Side Panes*	4	1” x 11 5/8”
Bottom Pane	1	1” x 24”

*side panes include outer and inner side panes
(inner side panes are the inner walls of the overflow cavity)

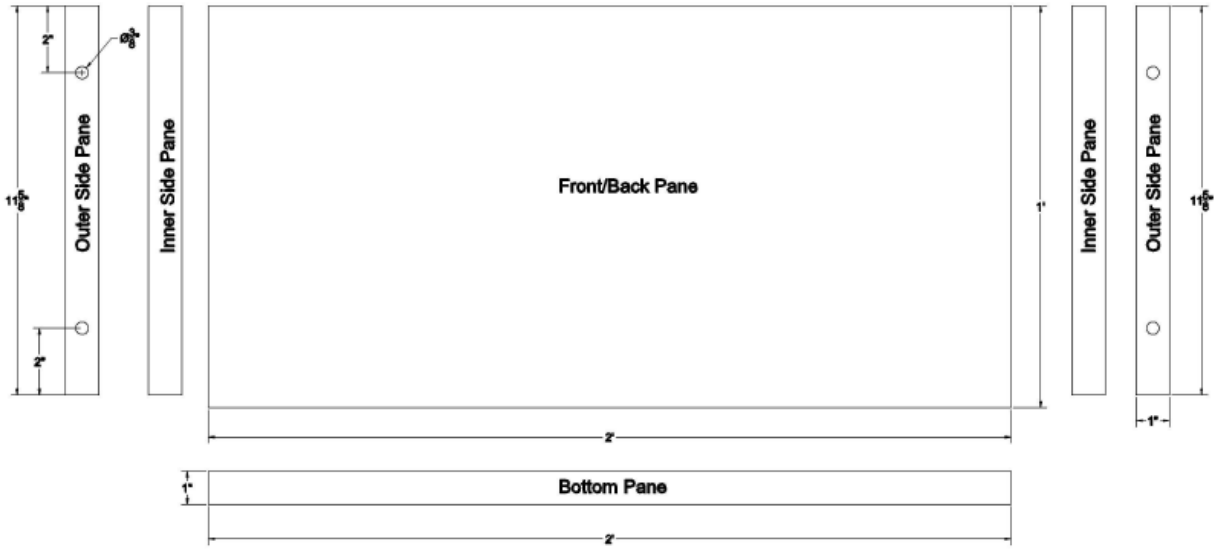

Figure 1. Acrylic Panes of Model

The front, back and bottom panes are left unaltered, but the side panes require further modifications. Two of the side panes become the inner side panes of the overflow cavity and steps for those modifications are found on pages 5 and 6. Two 3/8” holes are drilled in the outer side panes of the overflow cavity 2” from each end, and are threaded with 3/8” NPT (Fig 1.). Because NPT threads are directional, it will become important when assembling the model to note which side is to face outward. Make sure to mark which side is to face outward on these side wall pieces.

Inner Side Panes of Overflow Cavity

Two of the side panes will act as the inner wall to the overflow cavities on both sides of the model. They are cut on both sides using a table saw in such a way that allows water to pass to and from the overflow cavity. A ¼” deep (1/8” wide) cut is made length-wise through the center of one side (Fig. 2). The cut should create a trench through the pane but not cut it in half. On the other side similar ¼” deep trenches are made perpendicular to the first cut (width-wise) 1” apart (Fig 2,3). These cuts should similarly make a trench but not pass through the entire pane of acrylic. The cuts on both sides should be deep enough that their intersections meet, resulting in a through-hole in the acrylic. The length-wise cut should be covered with wire mesh.

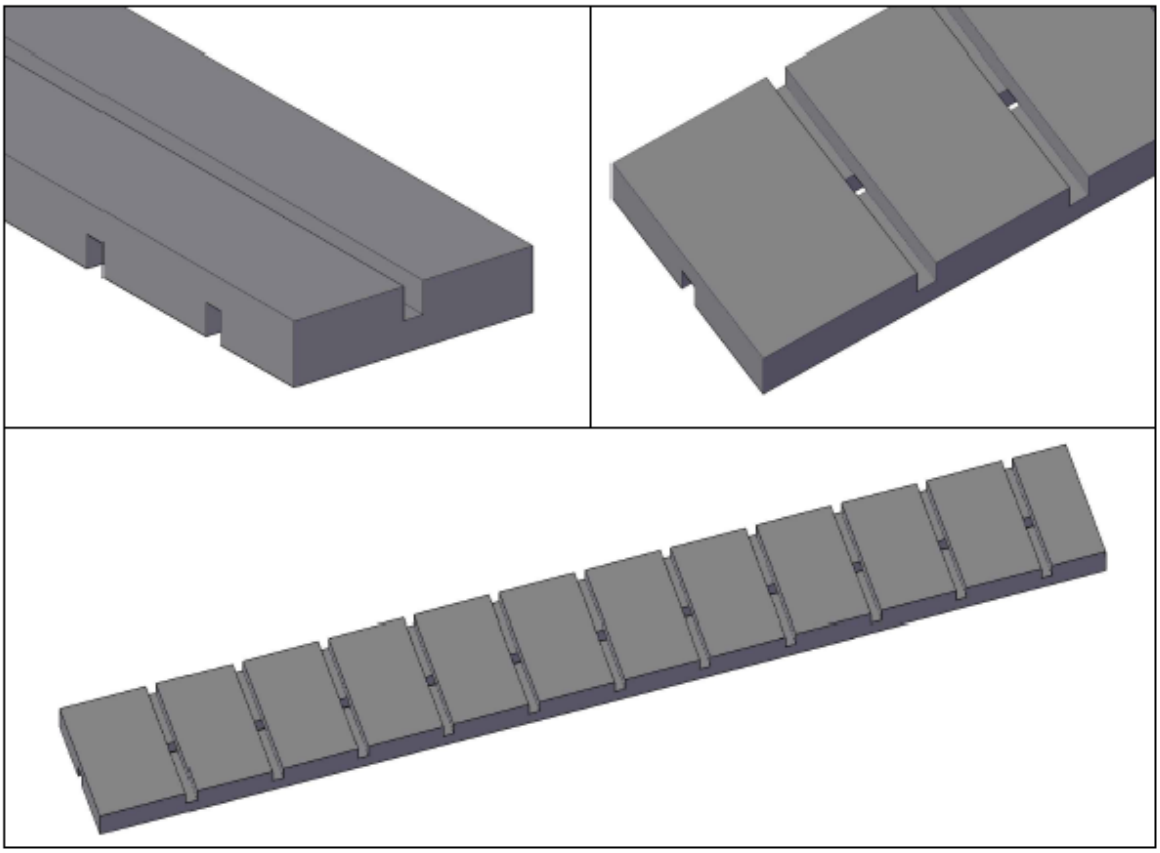

Figure 2. Inner Side Panes of Overflow Cavity

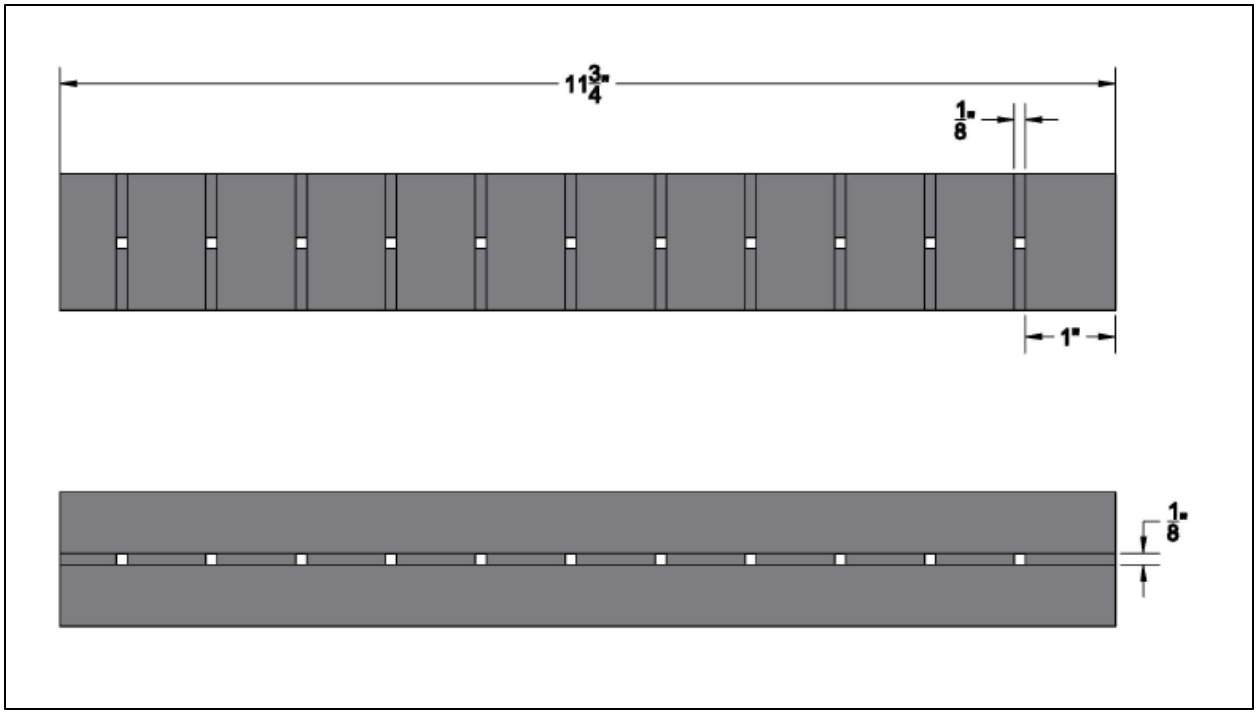

Figure 3. Inner Side Panes of Overflow Cavity with Dimensions

Observation Wells

The observation wells/abandoned wells are created using clear acrylic u-channels. The u-channels measure 0.4” in width, with 0.125” walls (Fig. 4,5). These were ordered through American Plastics. There are four total in each model, two 10” and two 4.5”. The u-channels are cut to a 45° taper at one end and a wire mesh screen is glued to the tapered face using acrylic glue. On the other end, the inner channel is widened using a ¼” drill bit and a small ¼” OD acrylic tube segment is inserted and glued into place (not shown). This small tubing insert creates a circular hole in the top of the observation well, which is necessary to create a sufficient seal for pipette tip on the pumping line.

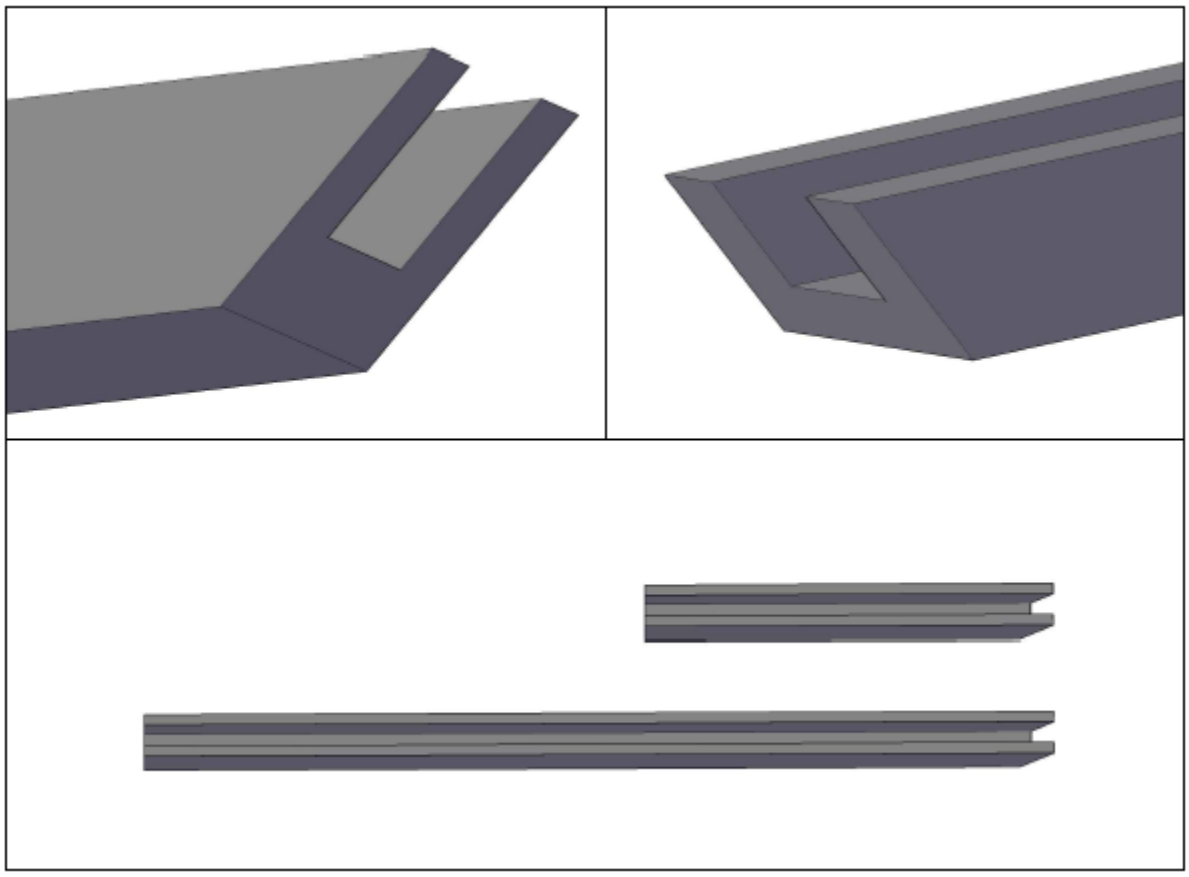

Figure 4. Acrylic Observation Wells

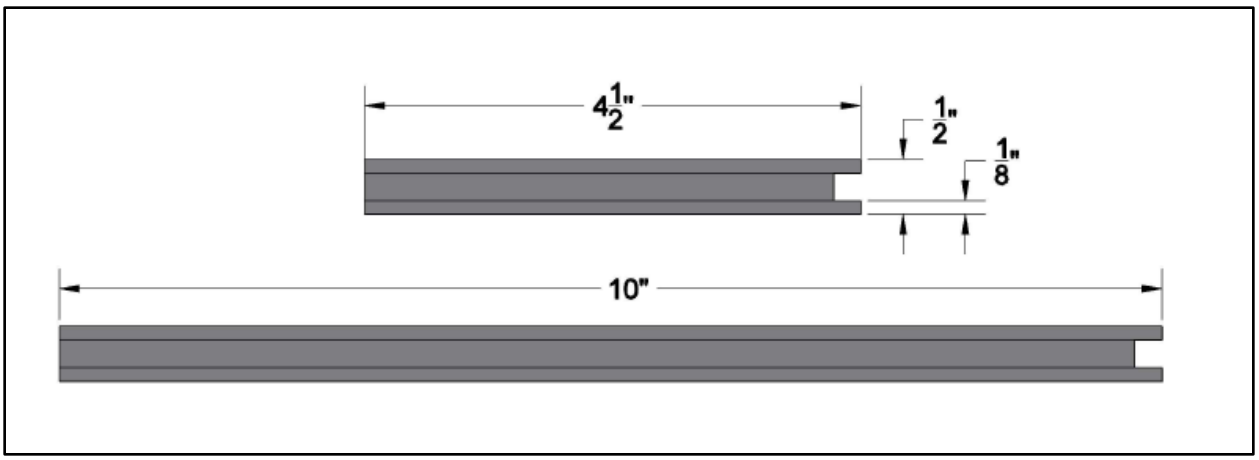

Figure 5. Acrylic Observation Wells with Dimensions

Old / New Stardard Wells

Outer Walls

The Old Standard and New Standard wells are pieced together using several machined acrylic parts. The outer wall of the well is created from a portion of a 2” acrylic extruded square tube purchased from McMaster-Carr. The square tube is 2” in width and height and has 1/8” walls (Fig 6,7). The tube is cut lengthwise ¾’ from the base to create a u-channel measuring 2” in width, ¾” in height and 11” in length. 1/8” holes are drilled along each face of the u-channel and a strip of wire mesh is glued over these openings, using acrylic glue, to prevent sand from entering the well. This creates the outer wall of the Old and New Standard wells.

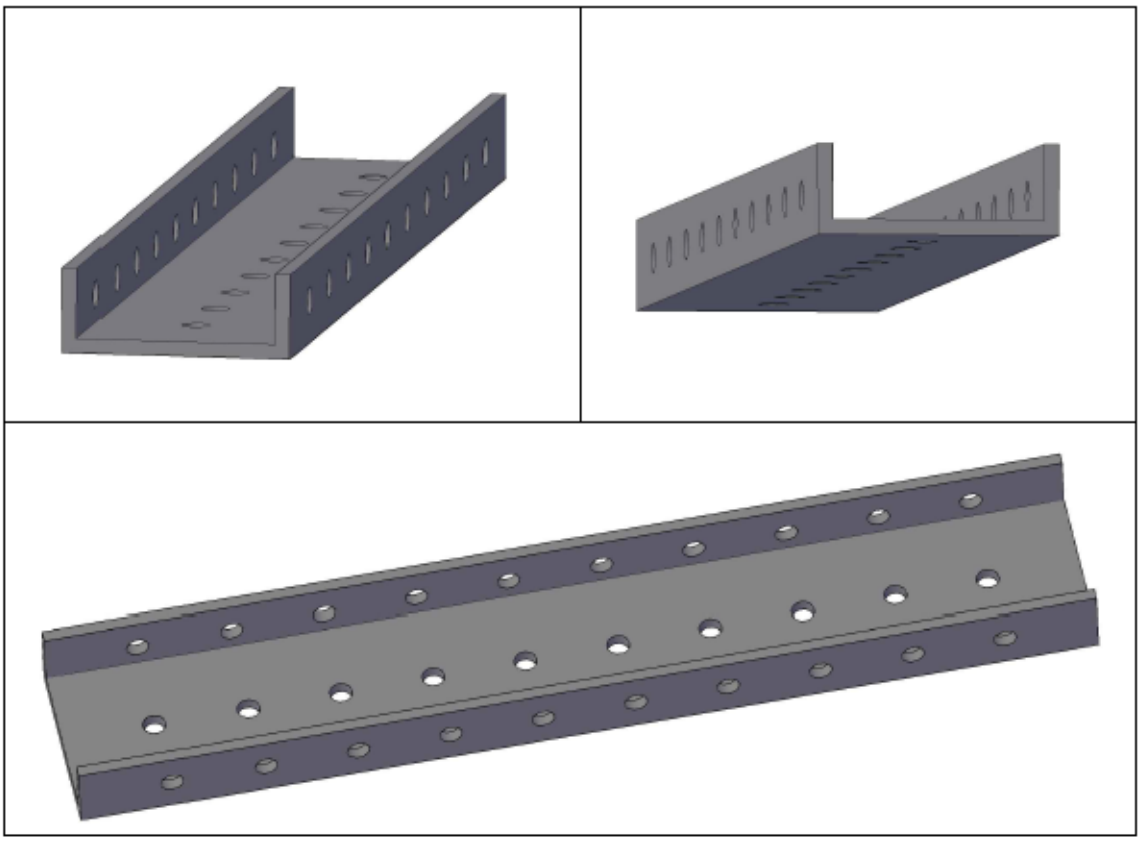

Figure 6. Outer Walls for Old/New Standard Wells

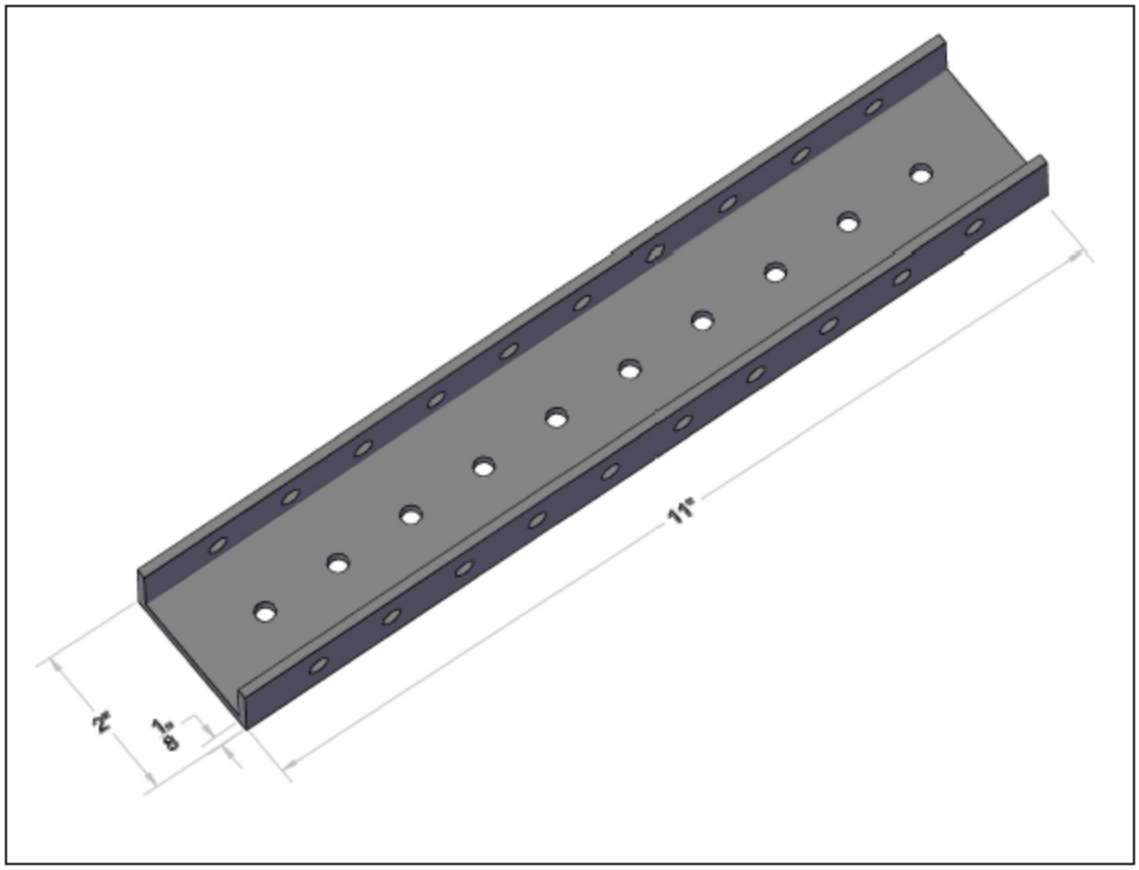

Figure 7. Outer Walls for New/Old Standard Wells with Dimensions

Inner Well Wall

The inner tube of the New and Old Standard wells is made from a 1” OD acrylic tube with 1/8” wall thickness (Fig 8,9). The 1” tube is cut lengthwise exactly in half to create 2 identical half-circle segments and is cut to measure 11” long. Nine 1/8” holes are drilled in the bottom inch of the tube to create a well screen. Wire mesh is glued over these holes as well. This creates the inner wall of the Old and New Standard wells.

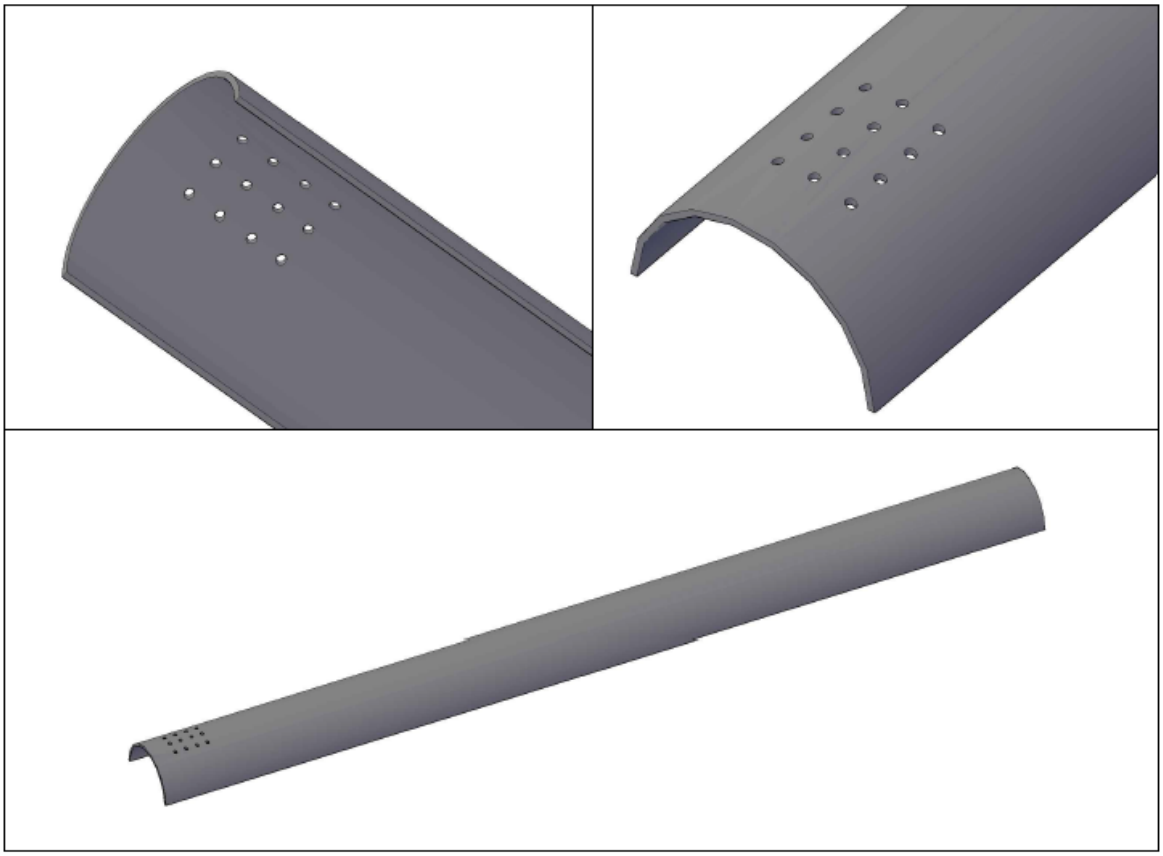

Figure 8. Inner Well Wall

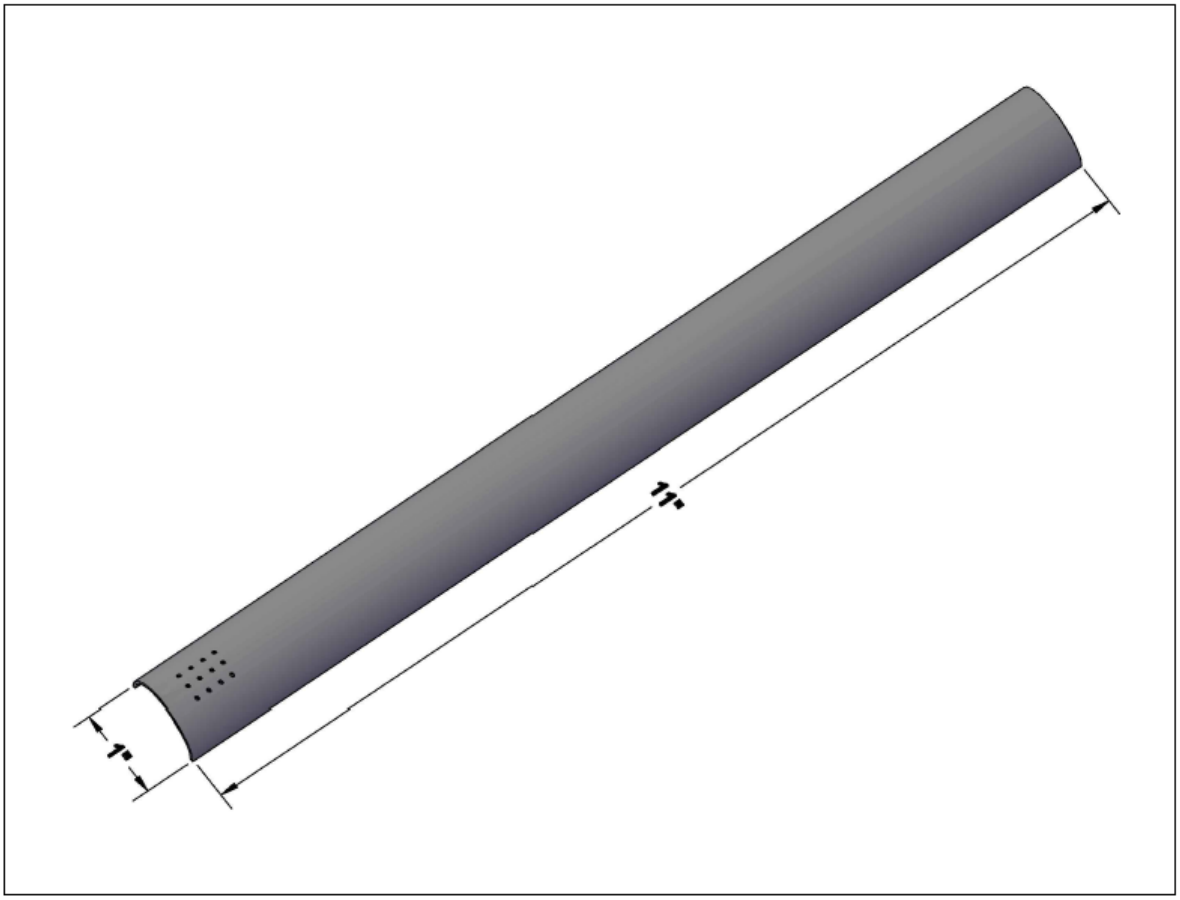

Figure 9. Inner Well Wall with Dimensions

New/Old Standard Well Assembly

The outer and inner well walls come together to form the Old and New Standard Wells and are glued together on a 2” x ¾” acrylic cap. Figure 10 shows each of these components separate and assembled.

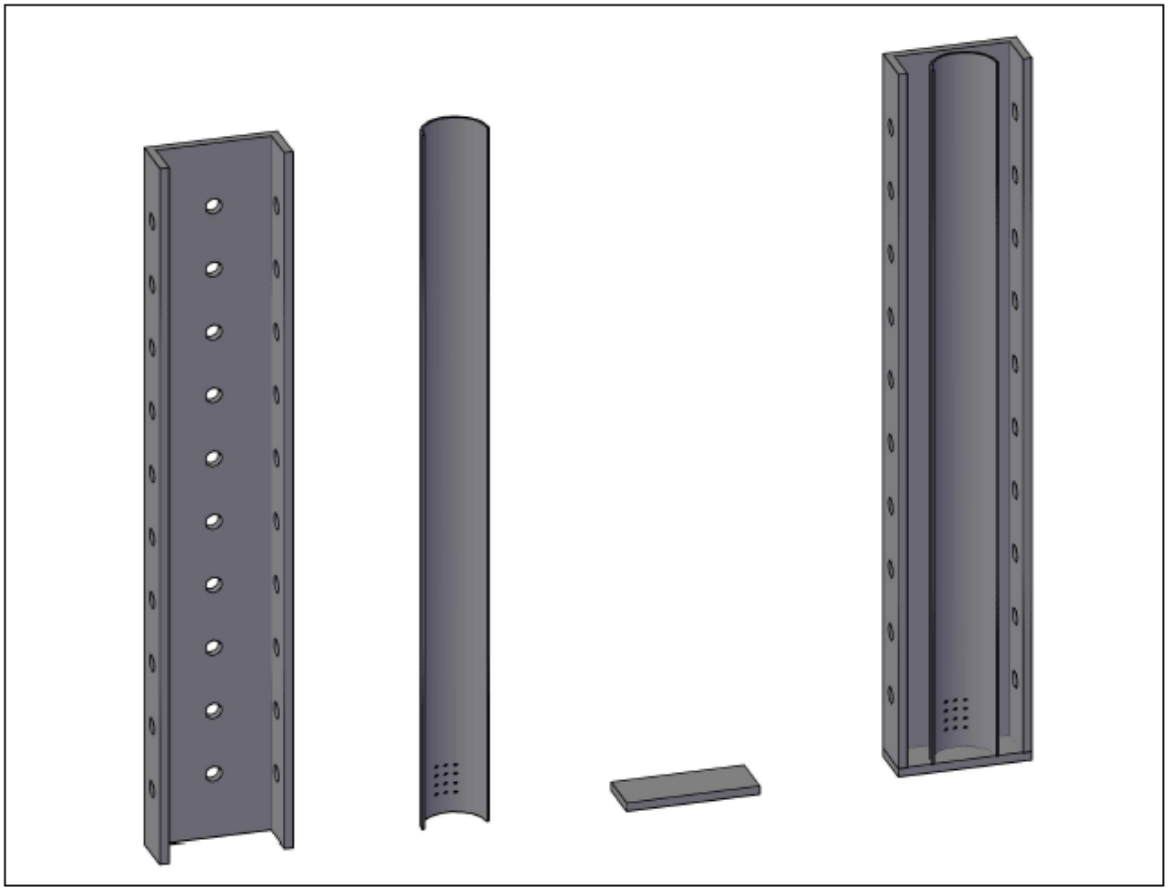

Figure 10. Old/New Standard Well Assembly

Point Sources

The point sources in the model are created using 2” OD acrylic tubing with ¼” wall thickness (Fig 11,12). This tubing is cut lengthwise down the middle to create two identical arced segments. The half-circle tube segments are cut to a width of 1” and three ¼” holes are made in the bottom of the arc.

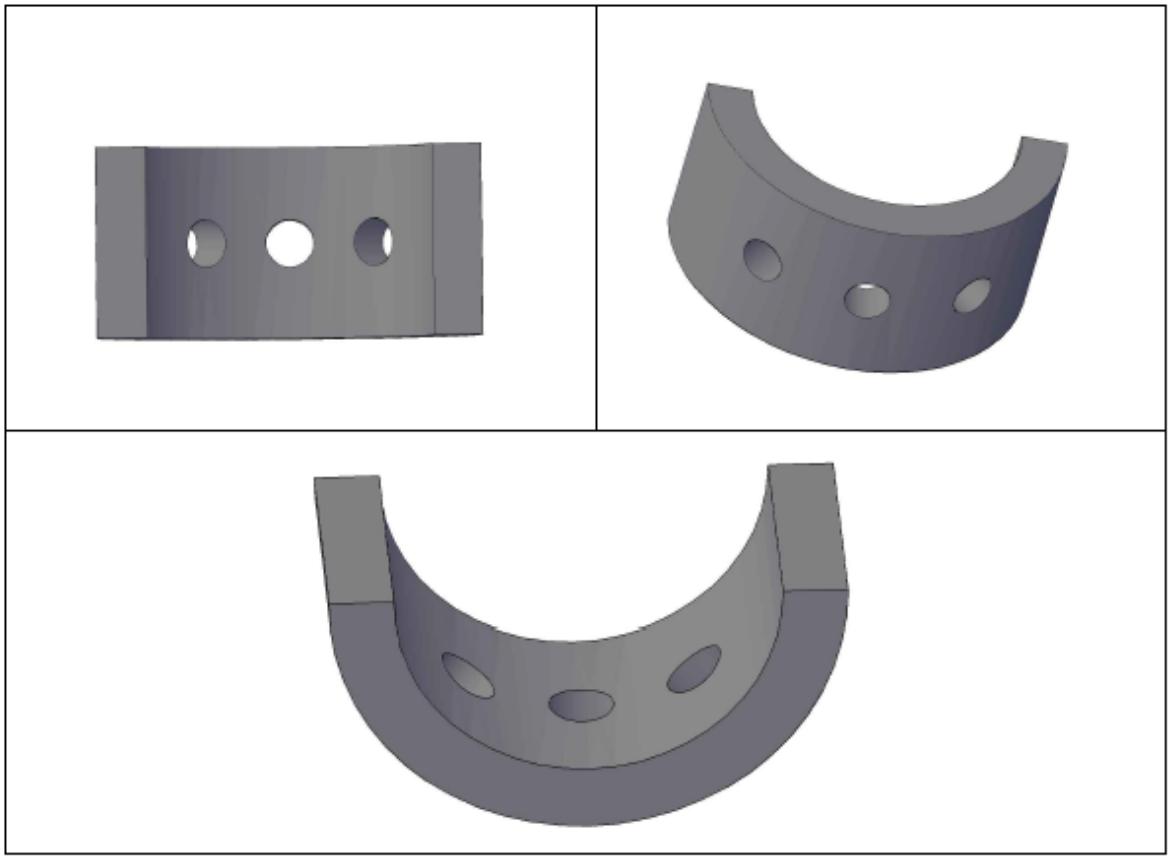

Figure 11. Point Source

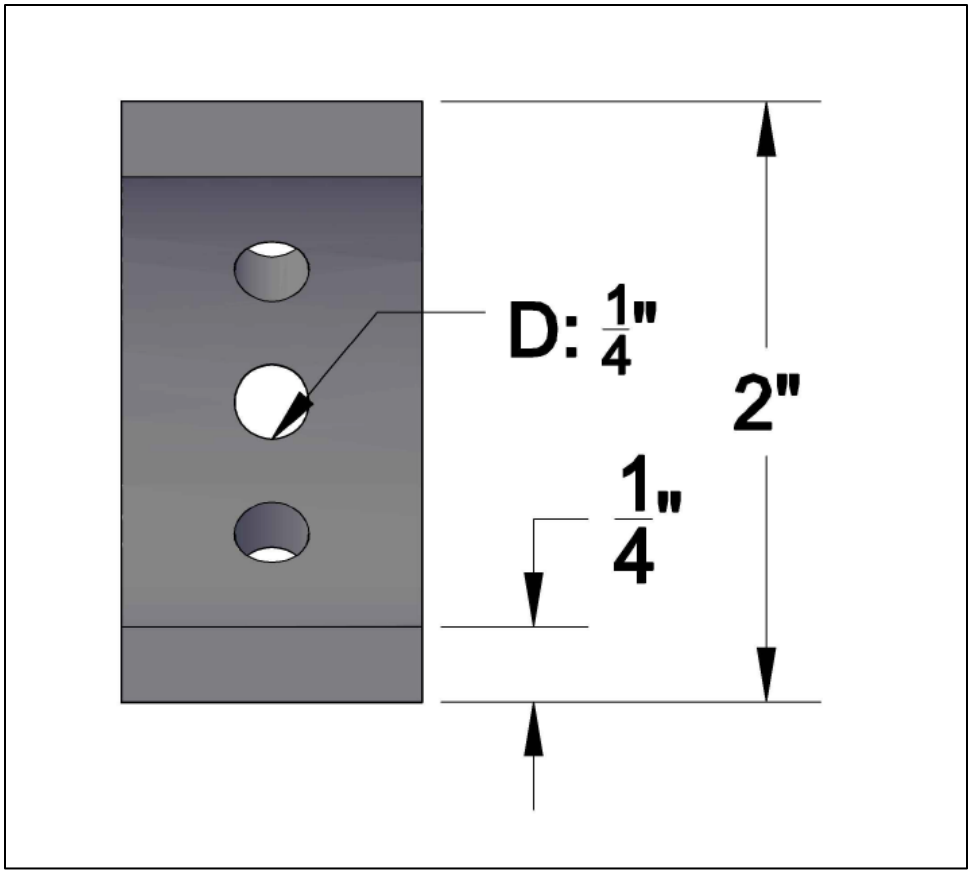

Figure 12. Point Source with Dimensions

Assembly

The bottom panes, side panes, observation wells, New and Old Standard Wells, and the point sources are all glued to the front pane of the model as shown in Figure 13. They should be glued in such a way as to be symmetrical. As shown in Figure 13, the orientation of the inner side panes of the overflow cavity should be such that the vertical trench is towards the inside of the model and the horizontal trenches face out. All pieces should be flush with the top of the model except the point sources, which should be 1” lower than the top of the model.

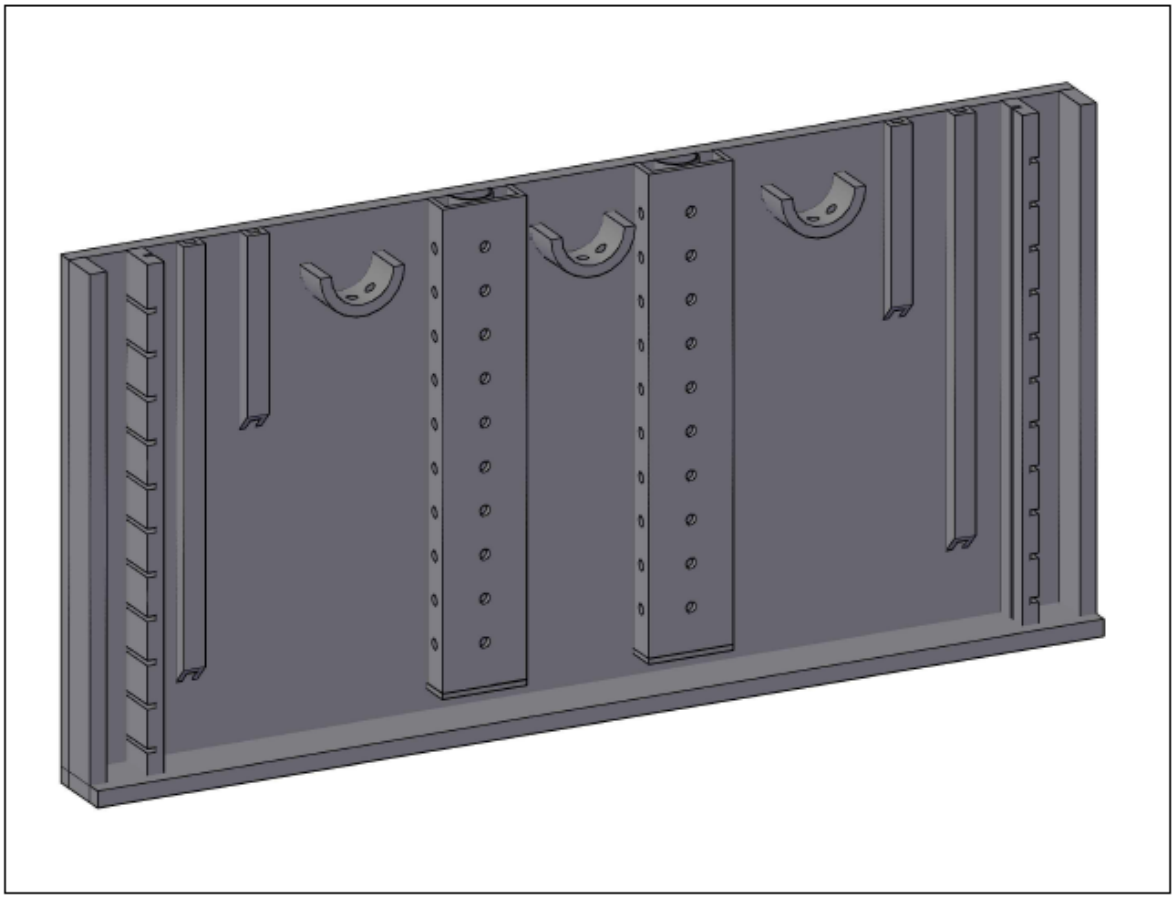

Figure 13. Model Components Glued to Front Pane

Before gluing the back pane onto the model, level the entire back side of the model, where the back pane will attach by milling the open surface down so it is completely even and smooth. Then the back pane can be glued on to the model.

Figure 14. Model Assembled without Front Pane *

Figure 14. above shows what the model would look like *without* the front panel and gives a representation of what the model should look like through the front pane when completed. ***This photo demonstrates placement only, the observation wells and New/Old Standard wells should not be glued to the back pane.**

The model construction should be complete. Insert two 3/8” NPT plugs into the bottom holes on each of the outer side panes and insert a compression fitting with overflow mechanism into the two upper holes. Fill the model with the appropriate sand & bentonite mixtures. Top the media with a black rigid foam to prevent the sand from shifting or spilling out.

Suppliers

American Plastics

P.O. Box 241099
Omaha, NE 68124-5099
Phone: (402) 346-7000
sales@americanplastics.us
http://www.americanplastics.us/

McMaster-Carr

600 N County Line Rd.
Elmhurst, IL 60126-2081
Phone: (630) 833-0300
http://www.mcmaster.com/